Cambridge Assessment International Education

Cambridge IGCSE™

CANDIDATE NAME	

CENTRE NUMBER						CANDIDATE NUMBER				

DESIGN & TECHNOLOGY **0445/33**

Paper 3 Resistant Materials **May/June 2023**

1 hour

You must answer on the question paper.

No additional materials are needed.

INSTRUCTIONS

- Section A: answer **all** questions.
- Section B: answer **one** question.
- Use a black or dark blue pen. You may use an HB pencil for any diagrams or graphs.
- Write your name, centre number and candidate number in the boxes at the top of the page.
- Answer in the space provided.
- Do **not** use an erasable pen or correction fluid.
- Do **not** write on any bar codes.
- You may use a calculator.

INFORMATION

- The total mark for this paper is 50.
- The number of marks for each question or part question is shown in brackets [ ].
- All dimensions are in millimetres.

This document has **28** pages. Any blank pages are indicated.

DC (DE/FC) 317427/3
© UCLES 2023

Section A

Answer **all** questions in this section.

1 Fig. 1.1 shows a chair that can be used when camping.

Fig. 1.1

State **three** specification points a designer would need to consider when designing a chair that will be used when camping.

1 .....

2 .....

3 .....
[3]

2 Fig. 2.1 shows two parts, **A** and **B**, of an incomplete tee bridle joint.

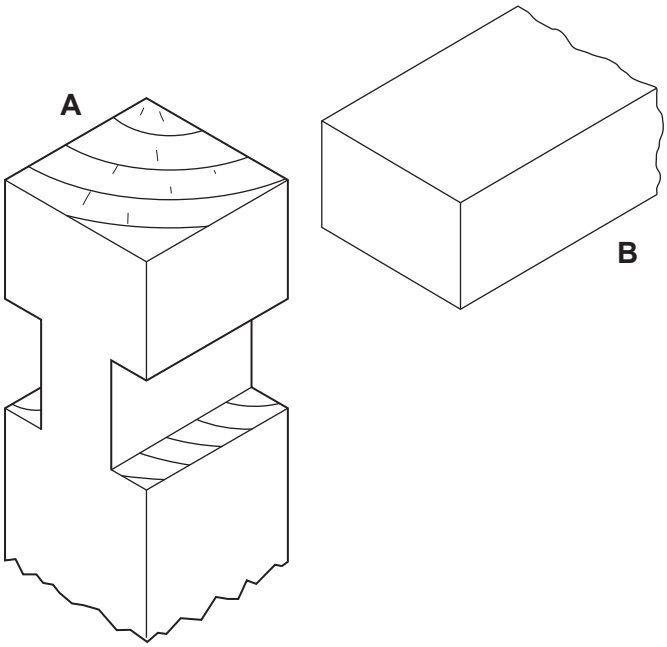

Fig. 2.1

Draw on part **B** in Fig. 2.1 to show the other part of the tee bridle joint. [3]

3 Fig. 3.1 shows a piece of sheet metal that will be folded to shape using a rawhide mallet.

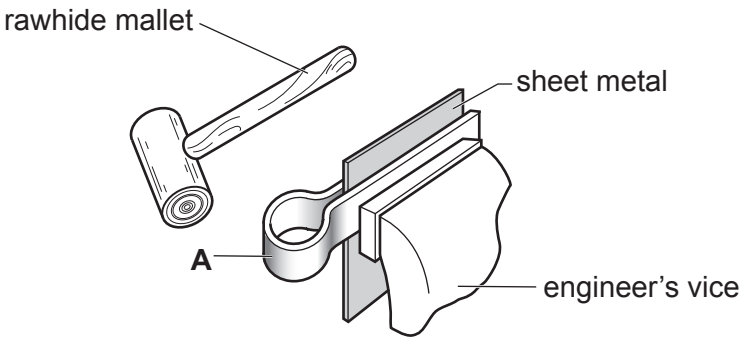

Fig. 3.1

(a) Name the item of equipment labelled **A** in Fig. 3.1.

..... [1]

(b) Give **one** reason why a rawhide mallet is used to fold the sheet metal rather than a hammer.

..... [1]

4 Fig. 4.1 shows a watering can made of plastic.

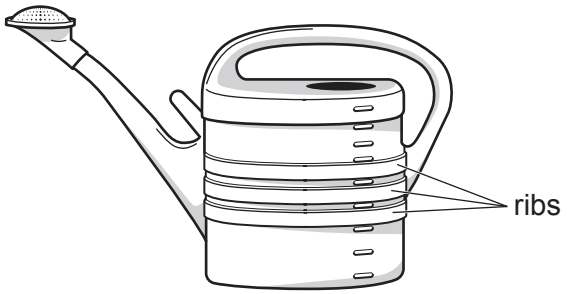

Fig. 4.1

(a) Name a suitable plastic for the watering can.

..... [1]

(b) State the manufacturing process used to produce the plastic watering can.

..... [1]

(c) State the purpose of the ribs shown in Fig 4.1.

..... [1]

5 Fig. 5.1 shows two different types of leg construction, **A** and **B**, for a small table made of hardwood.

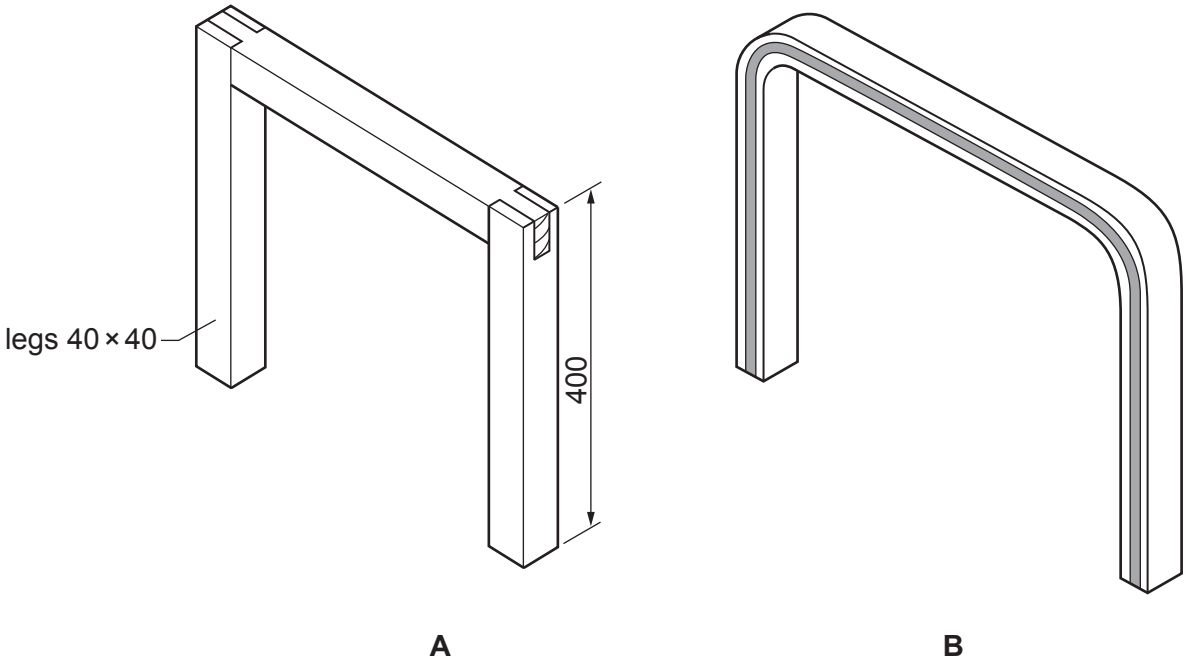

Fig. 5.1

(a) State the method of construction for leg type **B**.

..... [1]

(b) Give **two** advantages to a manufacturer of producing leg type **B** rather than leg type **A**.

1 .....

2 .....
[2]

6 Fig. 6.1 shows a mountain bike.

Fig. 6.1

Identify **three** ways the designer of the mountain bike has considered anthropometric data.

1 .....

2 .....

3 .....
[3]

7 Fig. 7.1 shows views of a coat rack with adjustable sliders.
The coat rack and the sliders are made of plastic and are produced by different methods of manufacture.

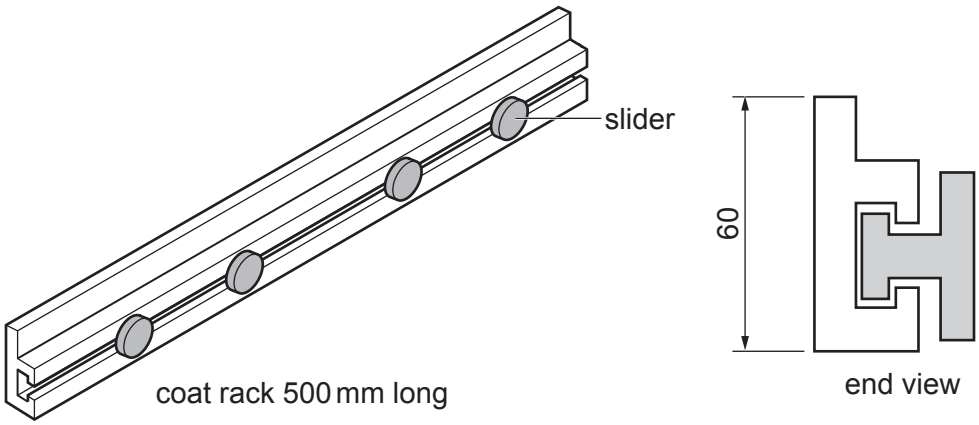

Fig. 7.1

(a) State a suitable method of manufacture for the coat rack.

..... [1]

(b) State a suitable method of manufacture for the sliders.

..... [1]

(c) Give **one** advantage of making the coat rack and sliders from plastic rather than wood.

..... [1]

8 Fig. 8.1 shows three recycling symbols, **A**, **B** and **C**, that relate to different materials.

A **B** **C**

Fig. 8.1

State the name of the material that each symbol relates to.

A .....

B .....

C .....
[3]

9 Select from the list below the material that corresponds to the description.

MDF **parana pine** **beech** **blockboard** **ash**

Hardwood, close-grained, withstands wear and shocks, used to make toys and flooring.

..... [1]

10 Fig. 10.1 shows a battery with a test strip that allows the user to check the condition of the battery. When a finger is pressed against each end of the test strip, a current from the battery flows through the strip, creating heat.
The heat causes the test strip to change colour, indicating the condition of the battery.

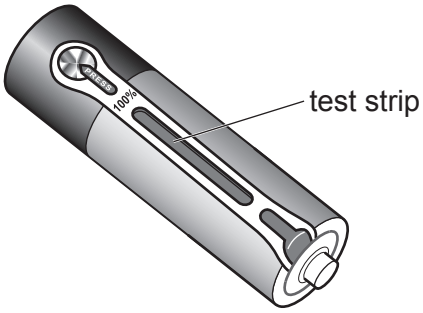

Fig. 10.1

Name the smart material used to coat the test strip.

..... [1]

Section B

Answer **one** question from this section.

11 Fig. 11.1 shows views of a photograph frame held in a stand.
The frame is made from MDF. The stand is made of hardwood.
The frame can be made to rotate inside the stand to show two photographs.

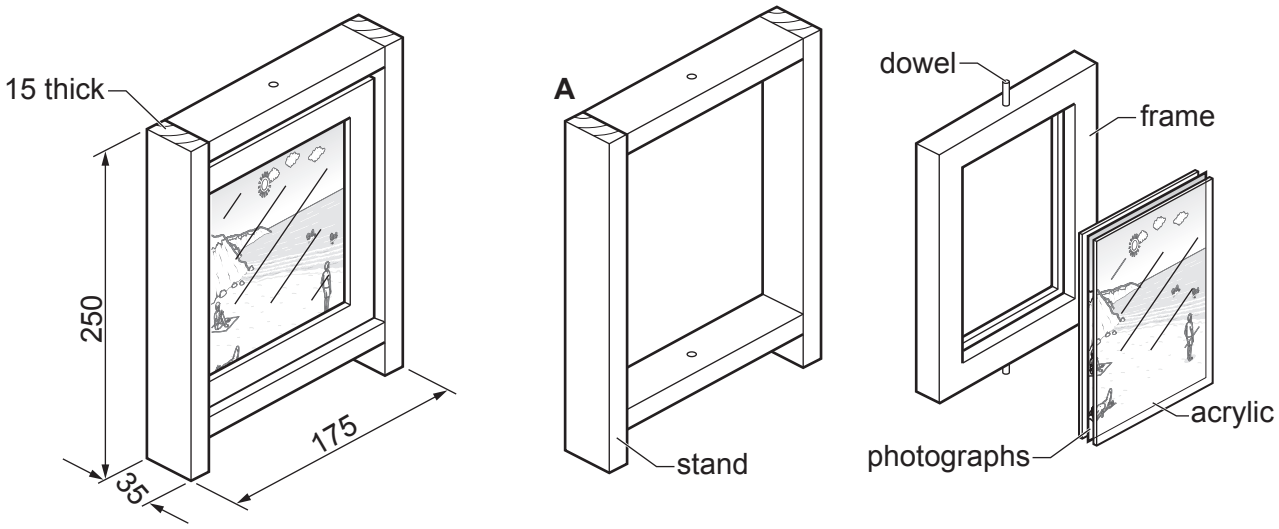

Fig. 11.1

(a) Circle from the list below **two** hardwoods that could be used to make the stand.

cedar **oak** **chipboard** **balsa** **teak**

[2]

(b) The frame is made from MDF. Other manufactured boards such as plywood could be used. Give **two** advantages of using MDF rather than plywood for the frame.

1 .....

.....

2 .....

.....

[2]

(c) A batch of 20 photograph stands is to be produced in a school workshop.
Fig. 11.2 shows a bench hook that can be used when sawing wood to length.

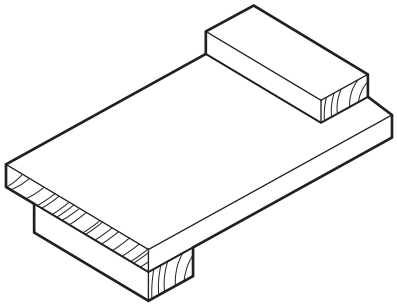

Fig. 11.2

Use sketches and notes to show how the bench hook could be modified to produce a jig for use when sawing **two** different lengths of hardwood, 250 mm and 145 mm, for the rails and uprights of the stand.
Name any additional materials and constructions used.

[5]

(d) Fig. 11.3 shows two constructions that could be used to join the parts of the stand.

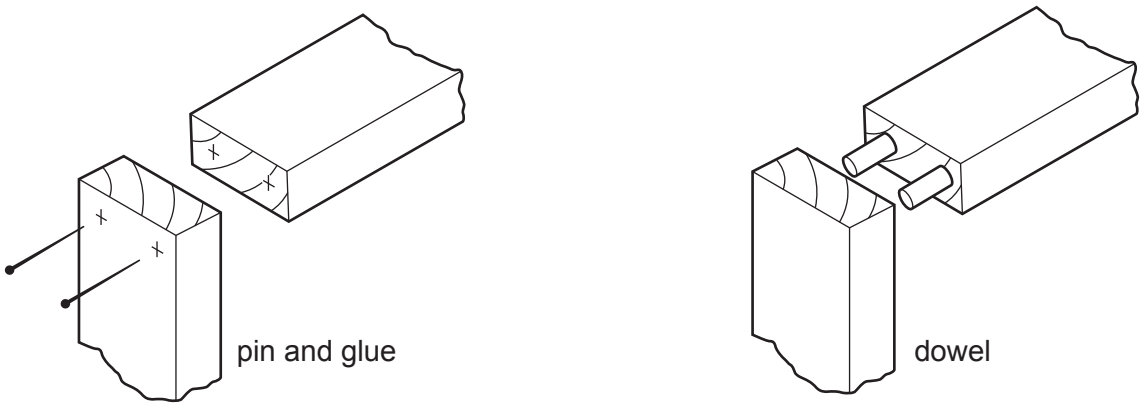

Fig. 11.3

Give **two** reasons why the dowel joint is stronger than the pin and glue construction.

1 .....

2 .....
[2]

(e) Fig. 11.4 shows the positions for the dowel joint at corner **A** shown in Fig. 11.1.

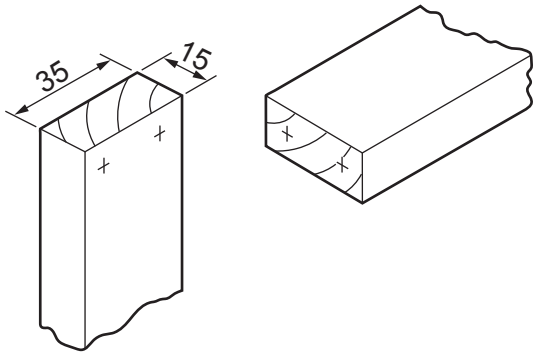

Fig. 11.4

Design a drilling jig that could be used to speed up batch production of the stands.
Name the material from which the jig is made.

[4]

(f) Fig. 11.5 shows the MDF frame with the cut-out shape marked out.
A power router will be used to remove the shape.

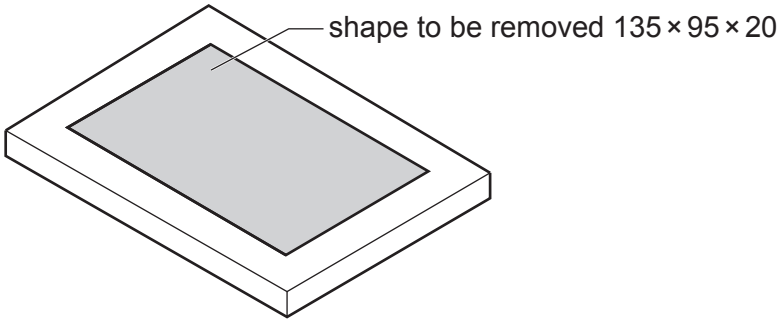

Fig. 11.5

State **two** checks that need to be made when setting up the power router before it is used to cut out the shape.

1 .....

2 .....
[2]

(g) Fig. 11.6 shows details of the photographs 'sandwiched' between two sheets of 2 mm thick acrylic. The photographs and acrylic sheets will be fitted inside the frame.

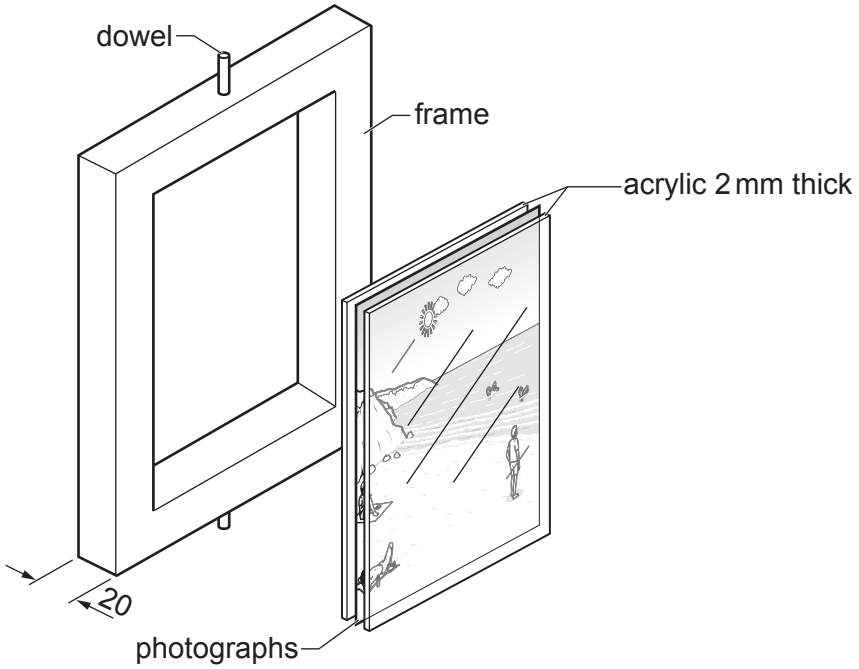

Fig. 11.6

Use sketches and notes to show modifications to the frame so that the photographs could be held securely inside the frame.
The modifications must allow the photographs to be changed easily.
Give details of additional materials and constructions used.

[6]

(h) The hardwood stand will have a clear polished finish.
Give **two** benefits of applying a clear polished finish to the hardwood stand.

1 .....

2 .....
[2]

12 Fig. 12.1 shows an incomplete design for a small table.
The tabletop is made of hardwood. The frames are made from mild steel rectangular tube.

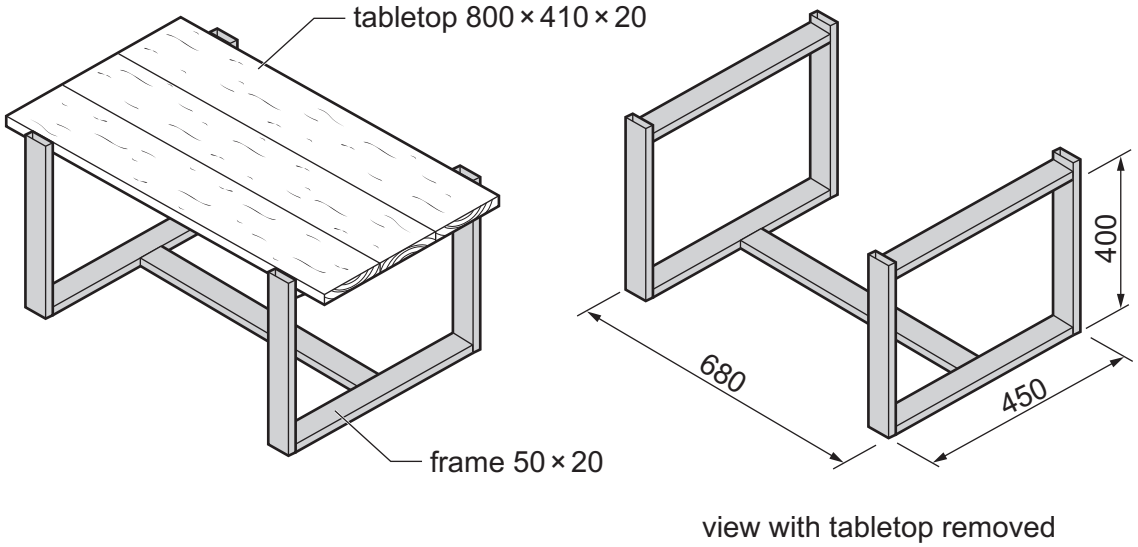

Fig. 12.1

(a) The frame of the table is made from 50 × 20 mild steel rectangular tube shown in Fig. 12.2.

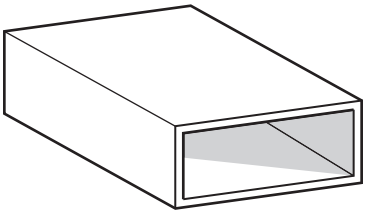

Fig. 12.2

Fig. 12.3 shows two other standard metal forms, **A** and **B**.

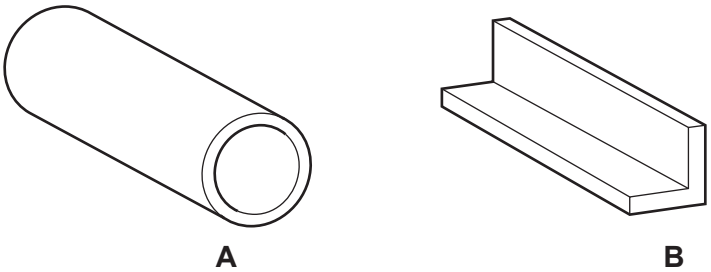

Fig. 12.3

State the correct term for each standard form **A** and **B**.

A .....

B .....
[2]

(b) The parts of the frame shown in Fig. 12.1 will be cut from the length of 50 × 20 rectangular tube shown in Fig.12.4.
Each part has been marked out ready to be cut to length.

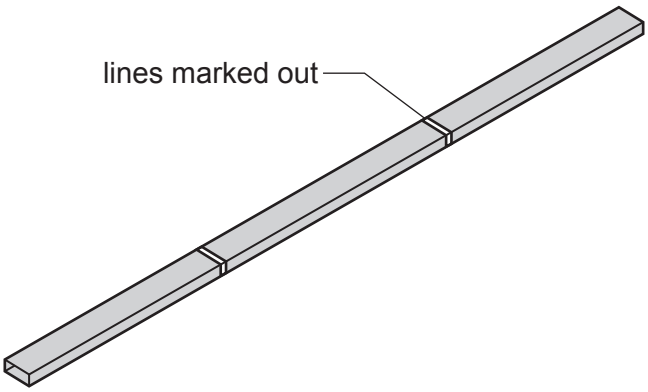

Fig. 12.4

Complete Table 12.1 by stating the name of the tools used for marking out the lengths of the mild steel rectangular tube.

Table 12.1

Tool	Name of tool
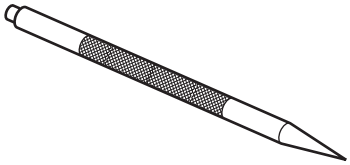	
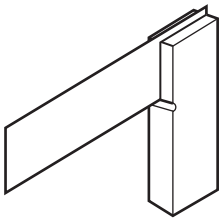	

[2]

(c) The parts of the frame will be joined by brazing.
Fig. 12.5 shows parts of the frame ready to be brazed.

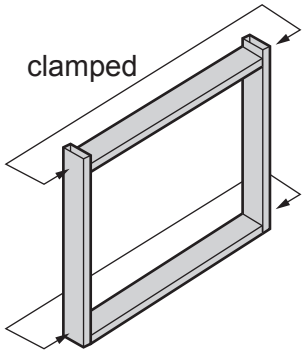

Fig. 12.5

(i) State the type of cramp that could be used to clamp the frame together.

..... [1]

(ii) Name **two** materials or items of equipment that could be used to prepare the ends of the mild steel rectangular tube to ensure the frame would be brazed successfully.

1 .....

2 .....
[2]

(iii) Explain why it is important to heat the ends of the mild steel rectangular tube to the correct temperature when brazing.

.....

.....

.....
[2]

(d) The tabletop is constructed from three hardwood boards.

(i) Give **one** reason why three boards have been joined together rather than using one board 410 mm wide.

..... [1]

(ii) The tabletop will be screwed to the frame.
Fig. 12.6 shows one frame with three holes drilled to take three screws.

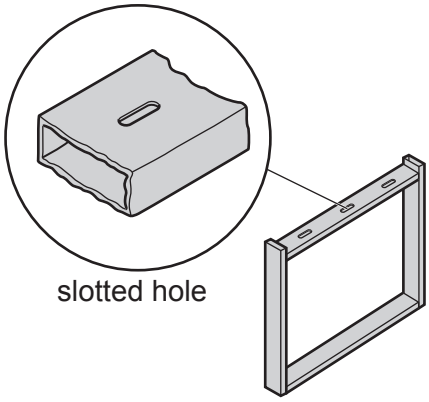

Fig. 12.6

Explain why the holes in the frame need to be slotted.

.....

.....

.....
[2]

(e) Use sketches and notes to show how the design of the table could be modified to include a shelf. The modified design must include the following details:

- the length and width of the shelf
- the names of additional materials used
- all constructional details.

[6]

(f) Fig. 12.7 shows one end of a frame.
The open ends of the mild steel rectangular tube are unattractive.

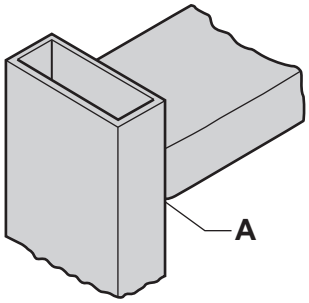

Fig. 12.7

(i) Use sketches and notes to show how the ends of the rectangular tube could be made to look attractive. State the names of any materials used and important sizes.

[3]

(ii) The frame of the table could be replaced with hardwood the same size as the 50 × 20 mild steel rectangular tube.
Sketch and name a suitable construction that could be used at **A** shown in Fig. 12.7.

[4]

13 Fig. 13.1 shows a paint palette made of 3 mm thick acrylic.
The paint palette has been designed using CAD and will be made by hand in a school workshop.

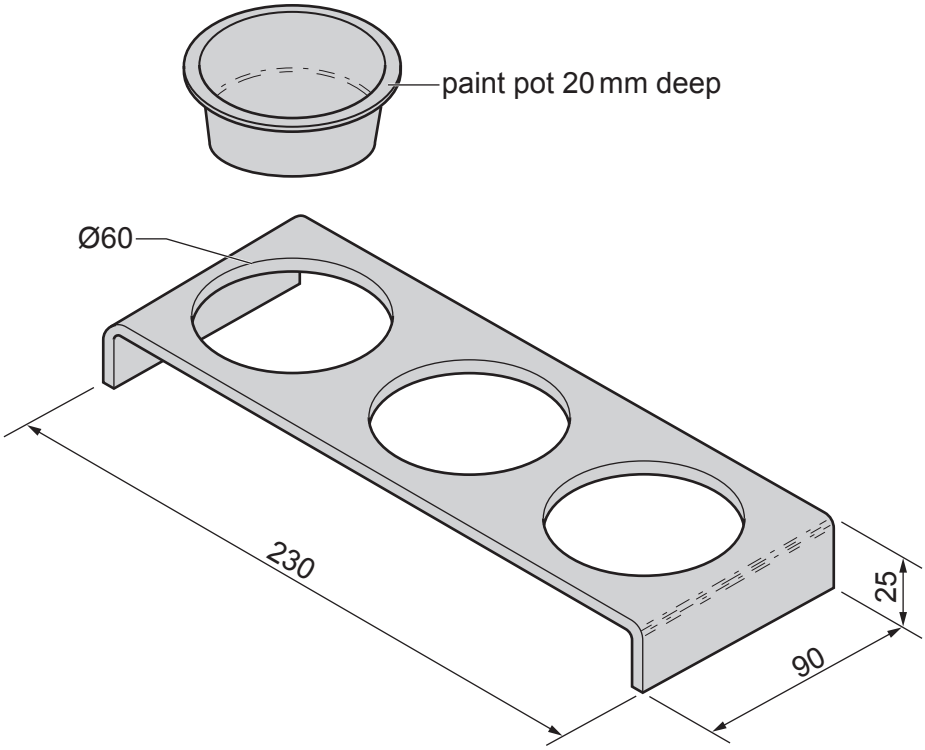

Fig. 13.1

(a) Fig. 13.2 shows a screenshot of the CAD drawing of the development (net) of the palette.

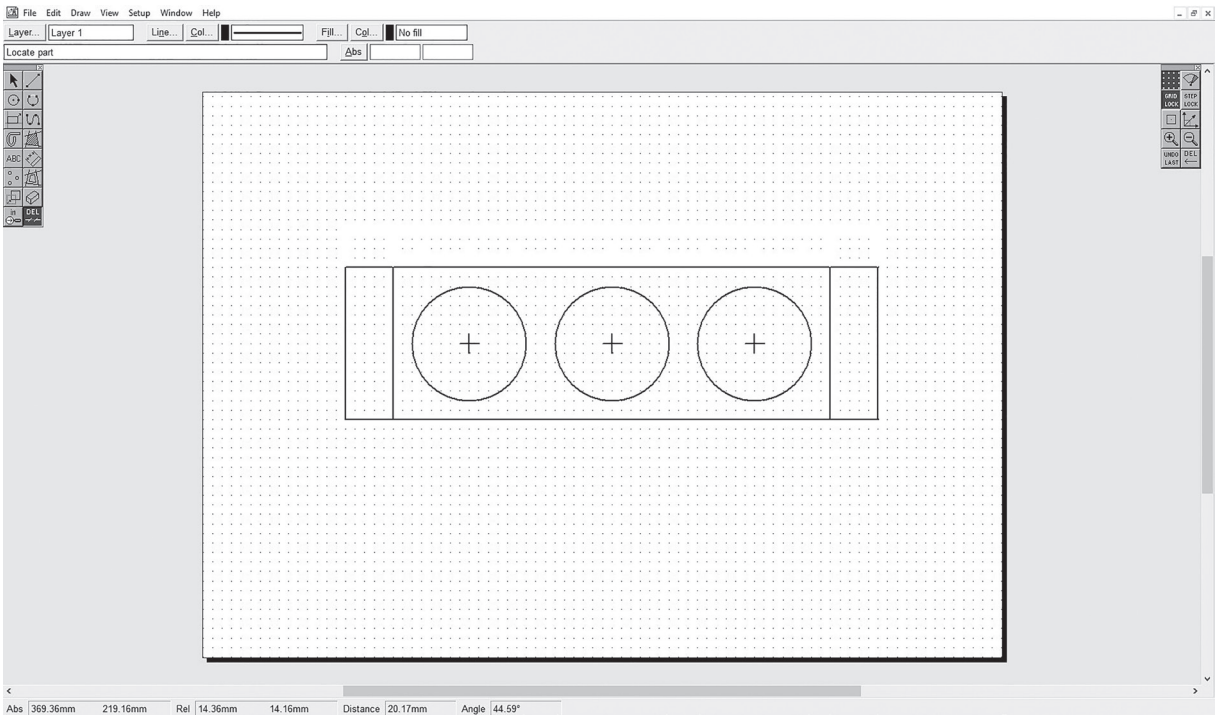

Fig. 13.2

Give **two** benefits of using CAD to design the paint palette.

1 .....

2 .....
[2]

(b) Fig. 13.3 shows one of the Ø60 holes that has been cut out using a drill and a saw.

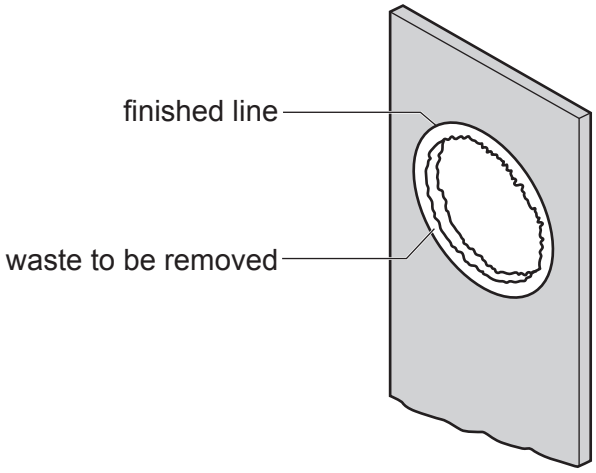

Fig. 13.3

(i) Give **one** reason why the holes would be cut out of the acrylic before it is bent to the shape of the palette.

..... [1]

(ii) Name a specific shape of file that could be used to remove the waste acrylic up to the finished line.

..... [1]

(iii) The engineer's vice shown in Fig.13.4 is used to hold the acrylic while it is being filed. There is a possibility of damaging the acrylic.

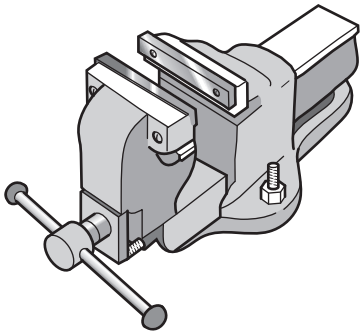

Fig. 13.4

State **one** possible cause of damage and describe how it could be prevented.

Possible damage .....

.....

Method of prevention .....

.....
[2]

(c) Fig. 13.5 shows a buffing/polishing machine.
The edges of the acrylic could be polished to a high quality before the acrylic is bent to the shape of the palette.

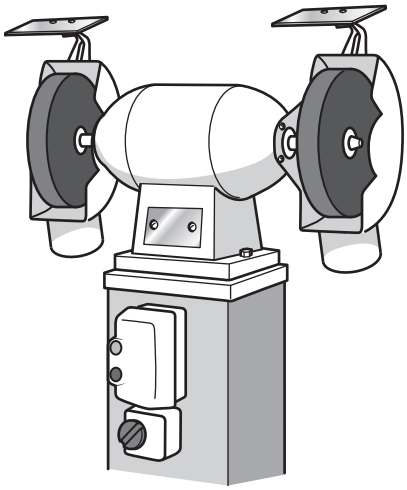

Fig. 13.5

Give **two** safety precautions that must be taken, other than the use of Personal Protective Equipment, (PPE), when using a buffing/polishing machine.

1 .....

2 .....
[2]

(d) Fig. 13.6 shows the development (net) of the palette being heated on a strip heater.

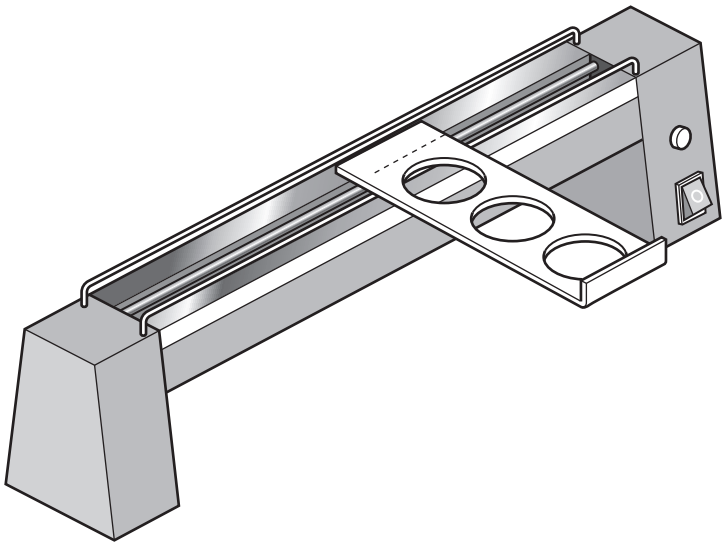

Fig. 13.6

Give **one** reason why the acrylic should be turned over frequently when it is heated.

..... [1]

(e) Fig. 13.7 shows one end of the development (net) of the palette being bent to shape on a bending jig after it has been heated.

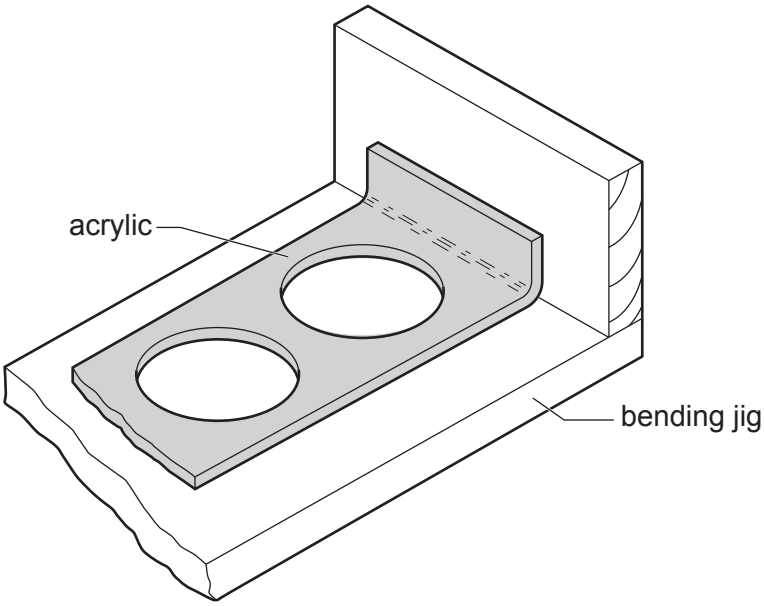

Fig. 13.7

Add sketches and notes to Fig. 13.7 to show how the heated acrylic could be held in position while it cools.

[2]

(f) Fig. 13.8 shows a front view of the mould that will be used to vacuum form the paint pots.

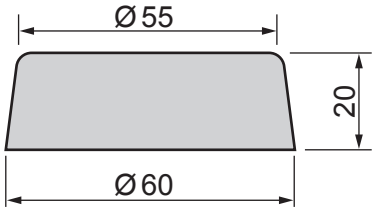

Fig. 13.8

(i) Circle from the list below the most suitable wood that could be used to make the mould.

plywood **chipboard** **oak** **MDF**

[1]

(ii) Part of the mould has a draft angle.
Indicate clearly on Fig. 13.8 a draft angle. [1]

(iii) State the purpose of the draft angle.

..... [1]

(g) The mould could be produced using a woodturning lathe.
Fig. 13.9 shows the mould and two lengths of wood, **A** and **B**, set up on a woodturning lathe.

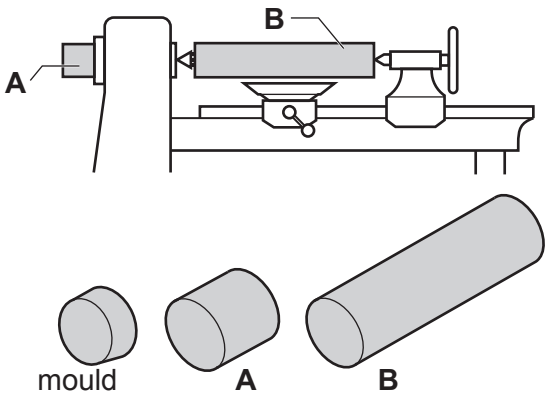

Fig. 13.9

Select from the list below the correct methods of woodturning that could be used to produce the mould from lengths of wood **A** and **B**.

taper **between centres** **parallel** **centre** **faceplate**

Length of wood **A** .....

Length of wood **B** .....

[2]

(h) **(i)** Use sketches and notes to show **five** main stages of the vacuum forming process used to produce **one** paint pot made from 1.5 mm thick acrylic.

[6]

(ii) Fig. 13.10 shows one paint pot after it has been vacuum formed and cut out roughly from the acrylic sheet.

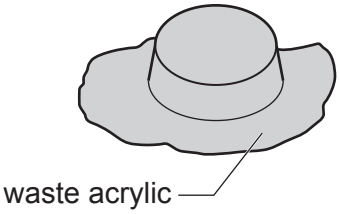

Fig. 13.10

Use sketches and notes to show how the waste acrylic could be removed to produce the finished shape with smooth edges.

[3]

BLANK PAGE

BLANK PAGE

BLANK PAGE

Permission to reproduce items where third-party owned material protected by copyright is included has been sought and cleared where possible. Every reasonable effort has been made by the publisher (UCLES) to trace copyright holders, but if any items requiring clearance have unwittingly been included, the publisher will be pleased to make amends at the earliest possible opportunity.

To avoid the issue of disclosure of answer-related information to candidates, all copyright acknowledgements are reproduced online in the Cambridge Assessment International Education Copyright Acknowledgements Booklet. This is produced for each series of examinations and is freely available to download at www.cambridgeinternational.org after the live examination series.

Cambridge Assessment International Education is part of Cambridge Assessment. Cambridge Assessment is the brand name of the University of Cambridge Local Examinations Syndicate (UCLES), which is a department of the University of Cambridge.

© UCLES 2023